HFC

HEATCRAFT™
Worldwide Refrigeration

Axial fan condenser

EUROVENT CERTIFIED PERFORMANCE
www.eurovent-certification.com

MA range

- Protected coil fully painted as standard.
- 3 types de motoventilateurs: 4, 6 and 8 pole for optimum noise attenuation.
- 2 blowing directions with horizontal or vertical installation with legs (optional).
- Modular product comprising 9 models: 3 types of coils and 3 types of fans.

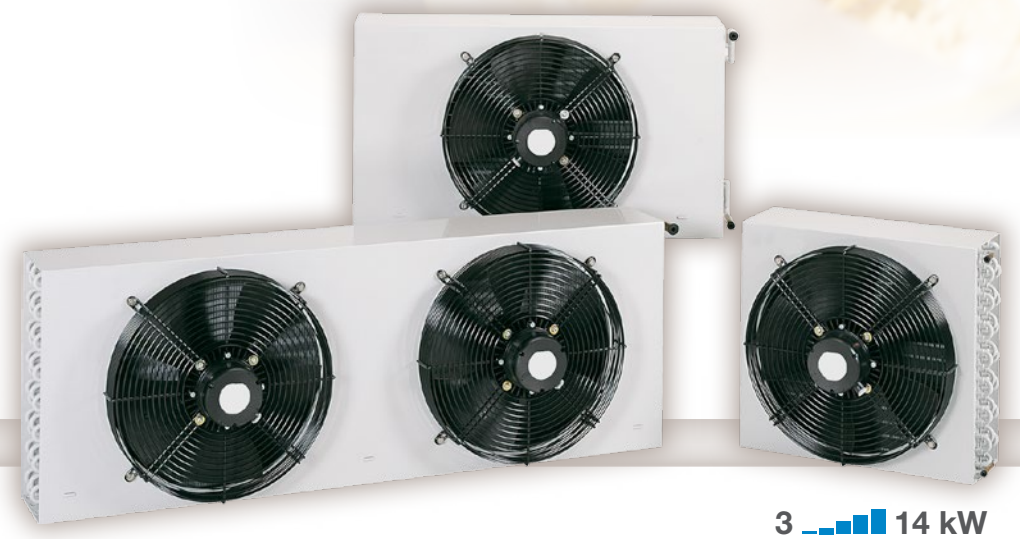

3 ▁▂▃▅▆ 14 kW

FRIGA-BOHN

HK® REFRIGERATION

Heatcraft reserves itself the right to make changes at any time without preliminary notice - Photos non-contractual

MA - Axial fan condenser

Market segments

• *Bars - Restaurants - Corner shops - Mini-markets*

Description

Casing

• Galvanized steel casing totally protected with polyester painting.

Ventilation

• 2 mono-fan models and 1 twin-fan model, Ø 350 mm.
• 04, 06 and 08P models for even better noise level attenuation.
• Fan(s) delivered unfitted, packing gland at bottom.

Certifications

Advantages

Installation

Legs (optional) for floor-mounted installation with vertical air flow.

Highly modular coil + separate motor concept:
rapid connection during fan assembly, gland located at the bottom.

Servicing / Maintenance

Fans of the "plug" type for easy maintenance.

Options

PIE Legs for MA installation with vertical air flow.

MA ... 04P/06P/08P (1300/910/650 rpm.) 3,63 mm

		MA ...	1	1	1	2	2	2	3	3	3
			04P	06P	08P	04P	06P	08P	04P	06P	08P
Capacity R404A	DT1 = 15K	kW	**4,1**	**3,2**	**2,8**	**7,9**	**5,8**	**4,7**	**12,3**	**9,2**	**7,8**
Surface		m^2	5,7	5,7	5,7	12,9	12,9	12,9	20,9	20,9	20,9
Circuit volume		dm^3	0,9	0,9	0,9	2,1	2,1	2,1	3,4	3,4	3,4
Fan (1)	Air flow	m^3/h	1970	1220	950	2300	1450	1110	4200	2650	2060
230V/1/50Hz	Nb x Ø	mm	1 x 355	1 x 355	1 x 355	1 x 355	1 x 355	1 x 355	2 x 355	2 x 355	2 x 355
Energy efficiency class			E	D	D	D	C	B	D	C	C
Acoustic	**Lw** (2)	dB(A)	70	60	53	70	60	53	73	63	56
	Lp (3)	dB(A)	38	28	21	38	28	21	41	31	24
Net weight with fan(s)		kg	7	7	7	12	12	12	15	15	15
Dimensions	**A**	mm	125	125	125	122	122	122	122	122	122
	B	mm	34	34	34	15	15	15	15	15	15
Inlet	Ø **E**	ODF * ODM **	8 mm 3/8"	8 mm 3/8"	8 mm 3/8"	1/2"	1/2"	1/2"	5/8"	5/8"	5/8"
Outlet	Ø **S**	ODF * ODM **	8 mm 3/8"	8 mm 3/8"	8 mm 3/8"	1/2"	1/2"	1/2"	5/8"	5/8"	5/8"
Packaging		mm	570 x 430 x 185			880 x 430 x 185			1280 x 460 x 185		
Fan packaging		mm	460 x 460 x 185 (x1)			460 x 460 x 185 (x1)			460 x 460 x 185 (x2)		

(1) 04P : 117 W max - 0,9 A max (4)
06P : 80 W max - 0,45 A max (4)
08P : 65 W max - 0,35 A max (4)
(2) Sound pressure level in dB(A), obtained in compliance with standard NF EN 13487 (parallelepiped reference surface).

(3) Sound pressure level in dB(A) measured at 10 m, line of sight, on a reflective parallelepiped measurement surface, given for information only. Values measured under nominal operating conditions with clean coils and rated voltage.
(4) Setting of overload protection levels.
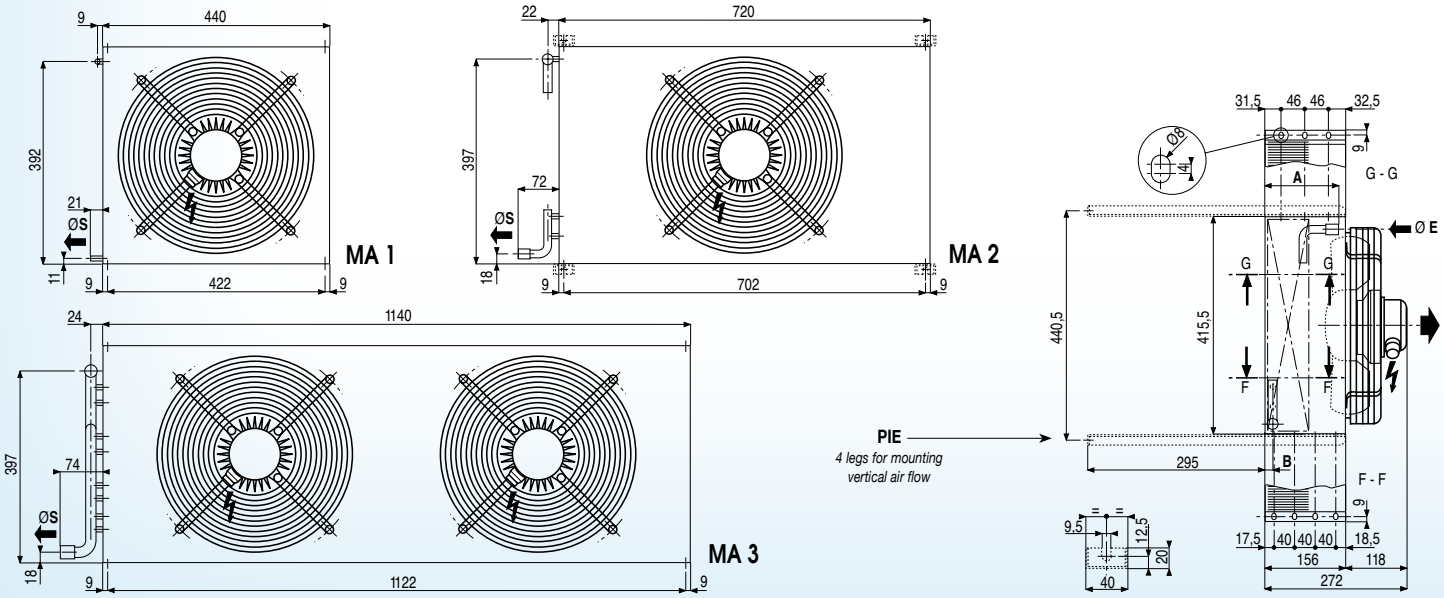
** ODF: Female to receive a tube of the same diameter.*
*** ODM: Male to receive a tube of the same diameter.*